Robotics

IRB 1410
Industrial Robot

The IRB 1410 gives you fast and reliable work cycles that boost productivity. The robot is proven in arc welding applications and provides outstanding performance and value, ensuring short payback times.

The robot has a handling capacity of 5kg at the wrist with a unique 18kg additional load for applications equipment on the upper arm. Superior levels of control and path-following accuracy provide excellent work quality.

The ability to adjust process speed and position means you achieve optimum manufacturing accuracy with little or no rejects.

IRB 1410 is known for its stiff and robust construction. This translates into low noise levels, long intervals between routine maintenance and long service life. The robot has a large working area and long reach. The compact design, very slim wrist and high performance operation even in difficult and restricted locations.

Adapted for arc welding

The IRB 1410 has integrated wire feed cabling and mounting holes for optimized assembly of process equipment on the arm. Easy-to-use arc welding functions are included as standard in the IRC5 robot controller are made available via the patented programming and operation interface unit - the FlexPendant.

Specification

Robot	Handling Capacity	Reach of 5 th axis
	5 kg	1.44 m
Supplementary load		
on axis 3	18 kg	
on axis 1	19 kg	
Number of axes		
Robot manipulator	6	
External devices	6	
Integrated signal supply	12 signals on upper arm	
Integrated air supply	Max. 8 bar on upper arm	
IRC5 Controller variants	Single cabinet, Compact	

Performance

Position repeatability (RP)	0.02 mm
Max. TCP velocity	2.10 m/s
Continuous rotation of axis	6

Electrical Connections

Supply voltage	200-600 V, 50/60 Hz
Rated power,	
Transformer rating	4 kVA/7.8 kVA with external axes

Physical

Robot mounting	Floor
Dimensions robot base	620 x 450 mm
Weight robot	225 kg

Environment

Ambient temperature	
Robot unit	5-45 °C
Relative humidity	Max. 95%
Degree of protection	Class D (dry) for welding, machining etc.
Noise level	Max. 70 dB (A)
Emmission	EMC/EMI-shielded
Clean room	Class 100 US Federal Standard 209e

Data and dimensions may be changed without notice

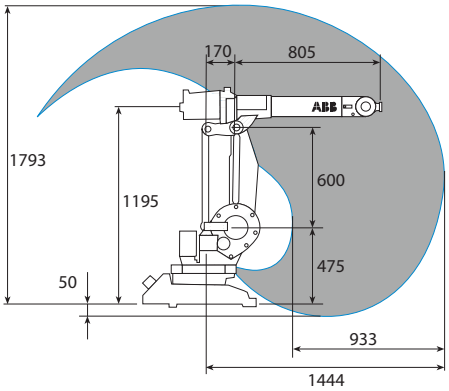

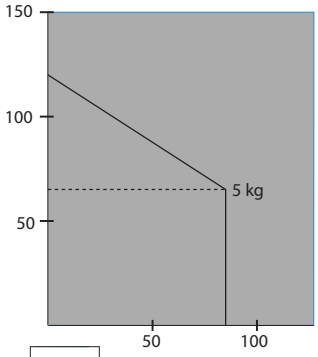

For more information please contact:

ABB AB
Robotics
Hydrovägen 10
SE-721 36 Västerås, Sweden
Phone: +46 21 325000

www.abb.com/robotics

Note
We reserve the right to make technical changes or modify the contents of this document without prior notice. With regard to purchase orders, the agreed particulars shall prevail. ABB does not accept any responsibility whatsoever for potential errors or possible lack of information in this document.

We reserve all rights in this document and in the subject matter and illustrations contained therein. Any reproduction, disclosure to third parties or utilization of its contents - in whole or in parts – is forbidden without prior written consent of ABB.

Copyright© 2016
ABB All rights reserved

© Copyright ABB Robotics. PR10325EN_R4 Dec 2016.